Downloaded from ascelibrary.org by Technion Israel Institute Of Technology on 02/22/25. Copyright ASCE. For personal use only; all rights reserved.

Source Treatment Level Optimization in Water Distribution Networks Considering Mixing Uncertainty at Cross Junctions: A Robust Counterpart Approach

Sriman Pankaj Boindala, S.M.ASCE[1]; G. Jaykrishnan[2]; and Avi Ostfeld, F.ASCE[3]

[1]Ph.D. Student, Faculty of Civil and Environmental Engineering, Technion–Israel Institute of Technology, Haifa, Israel. ORCID: https://orcid.org/0000-0002-1305-6586.
Email: srimanpankaj@gmail.com
[2]Ph.D. Student, Faculty of Industrial Engineering and Management, Technion–Israel Institute of Technology, Haifa, Israel. Email: jaykrishnang@hotmail.com
[3]Professor, Faculty of Civil and Environmental Engineering, Technion–Israel Institute of Technology, Haifa, Israel (corresponding author). Email: ostfeld@technion.ac.il

ABSTRACT

A water distribution system (WDS) comprises several uncertain parameters. This uncertainty makes the optimal management and design of a WDS a complex problem. Often parameters that explicitly affect water quality are ignored. The contaminant mixing at a junction is assumed to be uniform and instantaneous. Multiple studies prove this assumption wrong, and new water quality modelling methodologies are proposed. The exact computation of the mixing level is complicated and computationally expensive. This study focuses on obtaining the optimal treatment levels at the sources, assuming the mixing levels as uncertain/unknown. A robust optimization approach is proposed to handle this uncertainty. The proposed methodology is explained using an illustrative example 4×4 grid network. The objective of the problem is to obtain the water treatment levels at the sources to satisfy the water quality requirements at the demand nodes and be immune to variations in mixing levels at cross junctions. The results showed a significant variation in cost between complete mixing and non-uniform mixing. The obtained treatment levels were verified through Monte-Carlo simulations.

INTRODUCTION

Water distribution system goal is to provide high-quality water at sufficient quantities and pressures to customers. With the increasing migration of populations towards cities, the design and rehabilitation of these systems are becoming crucial. As a large population is dependent on a single system, the WDS's design and operation must be managed critically. In the past the focus was completely on satisfying the demands / hydraulic constraints; with recent awareness on water quality, researchers have been motivated to work on both water quality and system hydraulics issues in water distribution system design and operation. Maintaining desired water quality became essential as maintaining system hydraulics (Pasha and Lansey 2010). One of the major problems in the design and operation of WDS is uncertainty in system parameters.

Lansey et al 1989 were the first researchers to propose design methodology for WDS with uncertainty. They assumed probability distributions for uncertain variables and formulated chance constraints and solved using a non-linear programming method with generalized reduced gradient -II technique. They reported several designs and corresponding reliability values for two-looped network. Kapelan et al 2004 ,2005 worked to solve single and multi-objective WDS design problems with uncertainty using latin hypercube sampling (LHS) for PDF generation.

© ASCE

Downloaded from ascelibrary.org by Technion Israel Institute Of Technology on 02/22/25. Copyright ASCE. For personal use only; all rights reserved.

Babayan et al , 2005 replaced Monte Carlo simulation (MCS) or any other sampling techniques by adding a margin of safety factor in the required minimum pressure heads. He then simplified the stochastic formulation to deterministic formulation and solved using standard genetic algorithm (GA). Kang et al 2009 used approximation techniques like first order second moment (FOSM) and LHS for solving the stochastic formulation with less computational effort.Jung et al, 2012 used multi-objective GA to solve the design problem considering demand and pipe roughness as uncertain.

Due to the high computation time of probabilistic approaches, the research shifted towards using non-probabilistic approached to handle uncertainty in WDS parameters. Info gap decision theory and robust optimization are few of the popular non-probabilistic uncertainty handling technique. Chung et al, 2009 implemented robust optimization (RO) approaches to solve the design of municipal WDS considering demand as uncertain. Perelman et al 2013 used robust counterpart (RC) to solve least cost design problem of WDS with demand uncertainty. Ghelichi et al. (2018) and Naderi and Pishvaee (2017) also used investigated RO formulations to handle uncertainties in the water resources and stated their advantages over the probabilistic approach.

Most of the previous works in WDS design under uncertainty, proposed optimal designs that considers uncertainty in demands, pipe roughness, pressure head or a combination of them (i.e., almost all hydraulic parameters). However, there are very few studies that address uncertainty in water quality parameters in design and management of WDS. Pasha and Lansey (2005, 2010) examined the effect of few water quality uncertain parameters like bulk and wall reaction coefficients, and pipe diameters in the distribution system's water quality analysis. In addition to these water quality parameters, the uncertainty in solute mixing at cross junctions can also affect the consumer nodes' water quality requirements.

Fowler and Jones (1991) first investigated the validity of complete and instantaneous mixing at cross junctions in WDSs. Among several other concerns about the accuracy of water quality models, the assumption of complete mixing was regarded as a significant cause of erroneous outcomes in modeling water quality in pipes of WDSs. Romero-Gomez et al. (2008) investigated the impact of incomplete mixing on sensor network designs and found the perfect mixing assumption to be insufficient, with some locations not covered.. Ho and Khalsa (2008) developed a Bulk Advective Mixing model (BAM) for addressing the non-uniform mixing behaviour at cross junctions. They incorporated a mixing parameter "$s \in [0,1]$" which governs the extent of mixing from incomplete mixing being the lower bound and complete mixing being the upper bound. Song et al. (2009) also developed a non-uniform mixing model named (AZRED) to model incomplete mixing phenomena for specific junction types like T and Y junctions. Paez et al. (2017) compared the water quality at the consumer nodes assuming complete mixing (EPANET) and non-uniform mixing BAM model for WDS of two city networks and two different large grid networks. They concluded that the mixing uncertainty is more prominent in a grid-type network containing many cross junctions than the conventional city WDSs in the study.

The present design of WDS does not consider various uncertainties in water quality affecting parameters especially mixing uncertainty at junctions. This assumption may lead to unsatisfactory designs that may not satisfy the practical water quality constraints. Realizing the exact mixing phenomenon is quite complex and requires complex CFD simulation. The complexity only increases with the size of the WDS and the number of cross junctions. The current study aims to incorporate the mixing uncertainty in designing the water distribution system.

© ASCE

Downloaded from ascelibrary.org by Technion Israel Institute Of Technology on 02/22/25. Copyright ASCE. For personal use only; all rights reserved.

Present work is empathizing on quantifying the significance of non-uniform mixing uncertainty in WDS WDS design, and using non-probabilistic uncertainty handling technique like robust optimization to solve the complex, uncertain design problem.

METHODOLOGY

BAM model developed by (Ho et al. 2008) is used as the water quality model in the current study. Ho et al. (2008) showed that when two fluid streams with different flow values, and concentrations enter a cross junction, the distribution of solute concentrations in the fluid is between complete and incomplete mixing/bulk mixing. The extent of deviation from the complete mixing is controlled by a mixing parameter "s" which is generally obtained through experimentation. This mixing parameter is treated as uncertain, and the optimal robust design aims in providing designs immune to the level of mixing. Equations associated with BAM model are described below

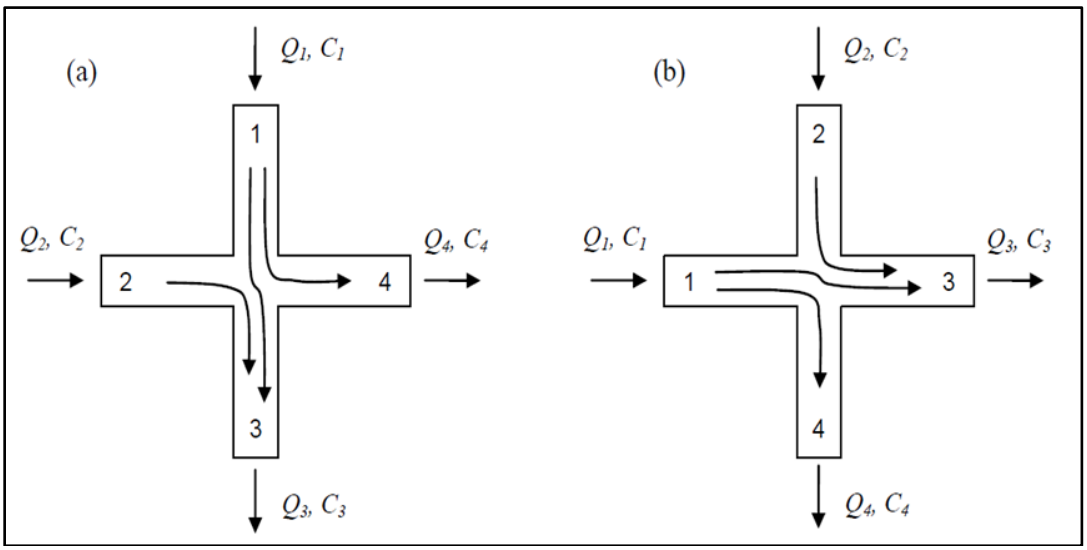

Legend: Q_1, Q_2, Q_3, Q_4 – Flows; C_1, C_2, C_3, C_4 – Concentrations where $Q_1 > Q_2$

Figure 1. Pictorial representation of bulk mixing (Ho et al, 2008)

The bulk mixing equations for the case are shown in Fig 1 where $Q_1 > Q_2$ can be written easily with mass balance,

$$C_4 = C_1 \tag{1}$$

$$C_3 = \frac{Q_2C_2 + (Q_1 - Q_4)C_1}{Q_3} \tag{2}$$

Whereas complete mixing equations are,

$$C_3 = C_4 = \frac{Q_1C_1 + Q_2C_2}{Q_3 + Q_4} = \frac{Q_1C_1 + Q_2C_2}{Q_1 + Q_2} \tag{3}$$

© ASCE

Downloaded from ascelibrary.org by Technion Israel Institute Of Technology on 02/22/25. Copyright ASCE. For personal use only; all rights reserved.

The final BAM model equation is between

$$C_{BAM} = C_{incomplete} + s * (C_{complete} - C_{incomplete}) \tag{4}$$

TREATMENT COST OPTIMIZATION PROBLEM

Assume that every source for the WDS is associated with a treatment plant, the extent of treatment required at the source level is governed by the water quality requirements at the customer nodes and level of mixing at the junctions. The objective of the problem is to obtain optimal treatment levels that satisfy the water quality constraints at the customer nodes and minimize the overall treatment cost at the sources. We assume steady state conditions and the contaminant is non-reactive.

The problem structure can be written as follows equation (5-6):

$$\min \mathrm{TC}(\mathrm{IRC}, \mathrm{RCAT}) \tag{5}$$

$$\mathrm{s.t.}\ \mathrm{C}^{\mathrm{j}}{}_{\mathrm{LL}} \leq \mathrm{C}^{\mathrm{j}}_{\mathrm{out}}\big(\mathrm{RCAT}, \mathrm{Q}, \mathrm{s}(\xi)\big)_{\mathrm{BAM}} \leq \mathrm{C}^{\mathrm{j}}_{\mathrm{UL}}, \forall \mathrm{j} \in \mathrm{J}, \xi \in \mathrm{U} \tag{6}$$

Here, TC -unit treatment cost, IRC – initial reservoir concentration before treatment, RCAT- reservoir concentration after the treatment, $\mathrm{C}^{\mathrm{j}}_{\mathrm{LL}}, \mathrm{C}^{\mathrm{j}}_{\mathrm{UL}}$ – lower limit and upper limit of desired outlet concentration at junction j, $\mathrm{C}^{\mathrm{j}}_{\mathrm{out}}$- outlet concertation at node j, Q- flows in pipes. Its states that the outlet concentration is dependent on the pipe flow, mixing parameter (which is uncertain) and reservoir concentration after treatment.

The explicit formulation of C^{J}_{out} for every node considering mixing parameter "s" as uncertain gets complex with increase in number of cross junctions, in order to eliminate the complexity, a data driven linear surrogate model is developed. The surrogate model is of the form shown in equation 7 where $\mathrm{C}^{\mathrm{j}}_{\mathrm{out}}$ is the outlet concentration and $\mathrm{a_j}$ is a vector and $\mathrm{E_j}$ is a matrix are obtained from regression modelling.

$$C^{j}_{out}\big(RCAT, Q, s(\xi)\big)_{BAM} = \boldsymbol{a}^{\boldsymbol{T}}_{\boldsymbol{j}} RCAT + RCAT^{T} \boldsymbol{E}_{j} s \tag{7}$$

Any convex model can be used instead of linear model if the accuracy is not significant

Using this surrogate model, the constraint (6) in treatment cost optimization problem can be re-written as

$$\mathrm{s.t.}\ \mathrm{C}^{\mathrm{j}}{}_{\mathrm{LL}} \leq \boldsymbol{a}^{\boldsymbol{T}}_{\boldsymbol{j}} * RCAT + RCAT^{T} \boldsymbol{E}_{j} s \leq \mathrm{C}^{\mathrm{j}}_{\mathrm{UL}}, \forall \mathrm{j} \in \mathrm{J}, \xi \in \mathrm{U} \tag{8}$$

ROBUST OPTIMIZATION

The RO approach for solving optimization with uncertainty is a 'worst-case-oriented' approach (Housh et al., 2011). For this study, the uncertainty set in which s lies is assumed to be a polyhedral set, i.e., $\mathrm{U} = \{\mathrm{s} \in \mathbb{R}^{\mathrm{I}}: \mathrm{L_s} \leq \mathrm{s} \leq \mathrm{U_S}\}$ which can be rewritten as, $\mathrm{U} = \{\mathrm{s} \in \mathbb{R}^{\mathrm{I}}: \mathrm{Xs} \leq \mathrm{y}\}$, where $\mathrm{X} = \begin{bmatrix} \mathrm{I}^{\mathrm{I}\times\mathrm{I}} \\ -\mathrm{I}^{\mathrm{I}\times\mathrm{I}} \end{bmatrix}$ and $\mathrm{y} = \begin{pmatrix} \mathrm{e} * \mathrm{U_s} \\ \mathrm{e} * \mathrm{L_s} \end{pmatrix}$, I is the identity matrix, e is the vector of all 1, and 0 is

© ASCE

Downloaded from ascelibrary.org by Technion Israel Institute Of Technology on 02/22/25. Copyright ASCE. For personal use only; all rights reserved.

the vector of all zeroes. The uncertain version of our problem can be reformulated using the 'worst-case-oriented' approaches below equation (9-12).

$$\min_{\mathrm{RCAT}} \mathrm{co}^{\mathrm{T}}(\mathrm{IRC} - \mathrm{RCAT}) \tag{9}$$

$$\mathrm{s.t.}\, \mathrm{C}^{\mathrm{j}}_{\min} \leq \min_{\mathrm{s}\in\mathrm{U}} \mathrm{a}^{\mathrm{T}}_{\mathrm{j}}\mathrm{RCAT} + \mathrm{RCAT}^{\mathrm{T}}\mathrm{E}_{\mathrm{j}}\mathrm{s}\ , \forall \mathrm{j} \in \mathrm{J} \tag{10}$$

$$\max_{\mathrm{s}\in\mathrm{U}} a_j^T RCAT + RCTA^T E_j s \leq \mathrm{C}^{\mathrm{j}}_{\max}\, , \forall \mathrm{j} \in \mathrm{J} \tag{11}$$

$$0 \leq \mathrm{RCAT} \leq \mathrm{IRC} \tag{12}$$

The RHS of equation 10 can be reformulated to a tractable form using robust counterpart. The RHS can be written as follows

$$\min_{\mathrm{s}\in\mathbb{R}^{\mathrm{I}}} a_j^T RCAT + RCAT^T E_j s \tag{13}$$

$$\mathrm{s.t.}\, \mathrm{Xs} \leq \mathrm{y}. \tag{14}$$

Writing the Lagrangian and minimizing, the dual objective is:

$$\min_{\mathrm{s}\in\mathbb{R}^{\mathrm{I}}} a_j^T RCAT + RCAT^T E_j s + \mu^{\mathrm{T}}_{\mathrm{j}}(\mathrm{Xs} - \mathrm{y}) \tag{15}$$

$$= \begin{cases} \mathrm{a}^{\mathrm{T}}_{\mathrm{j}} RCAT - \mu^{\mathrm{T}}_{\mathrm{j}} y, \text{if } RCAT^T \mathrm{E}_{\mathrm{j}} + \mu^{\mathrm{T}}_{\mathrm{j}}\mathrm{X} = 0 \\ -\infty, \text{else} \end{cases} \tag{16}$$

Using strong duality:

$$\min_{\mathrm{s}\in\mathrm{U}} a_j^T RCAT + RCAT^T E_j s = \max_{\mu\in\mathbb{R}^{2\mathrm{I}}_+} a_j^T RCAT - \mu_j^T y : \ RCAT^T \mathrm{E}_{\mathrm{j}} + \mu^{\mathrm{T}}_{\mathrm{j}}\mathrm{X} = 0 \tag{17}$$

We can drop the maximization and replace equation 10 with following equations

$$\mathrm{C}^{\mathrm{j}}_{\min} \leq \mathrm{a}^{\mathrm{T}}_{\mathrm{j}}\mathrm{RCAT} - \mu^{\mathrm{T}}_{\mathrm{j}} y \tag{18}$$

$$RCAT^T \mathrm{E}_{\mathrm{j}} + \mu^{\mathrm{T}}_{\mathrm{j}}\mathrm{X} = 0 \tag{19}$$

$$\mu_{\mathrm{j}} \geq 0 \tag{20}$$

Similarly, we can formulate the RC for equation 11, the complete reformulation of the treatment cost problem is written as follows

© ASCE

Downloaded from ascelibrary.org by Technion Israel Institute Of Technology on 02/22/25. Copyright ASCE. For personal use only; all rights reserved.

$$\min_{CR,\mu_j,\nu_j,j\in J} co^T(IRC - RCAT) \tag{21}$$

$$s.t.\, C^j_{min} \leq a^T_j RCAT - \mu^T_j y, \forall j \in J \tag{22}$$

$$RCTA^T E_j + \mu^T_j X = 0, \forall j \in J \tag{23}$$

$$a^T_j RCAT + \nu^T_j b \leq C^j_{max}, \forall j \in J \tag{24}$$

$$RCAT^T E_j + v^T_j X = 0 = 0, \forall j \in J \tag{25}$$

$$\mu_j, \nu_j \geq 0, \forall j \in J \tag{26}$$

$$0 \leq RCAT \leq IRC \tag{27}$$

ILLUSTRATIVE EXAMPLE

A hypothetical 4x4 sized grind network with three sources is used to test the RO methodology. The fig (2) depicts the network topology with all the nodes where non-uniform mixing can occur. The possibility of non-uniform mixing depends on flow direction. Sources 1 and 2 are at 0m elevation, and source-3 is 70m. The pump linking source-1 is of power 2, and the pump linking source 2 is of power 1.5. The base demand, elevation, and concentration limits of all the nodes are mentioned in Table 1.

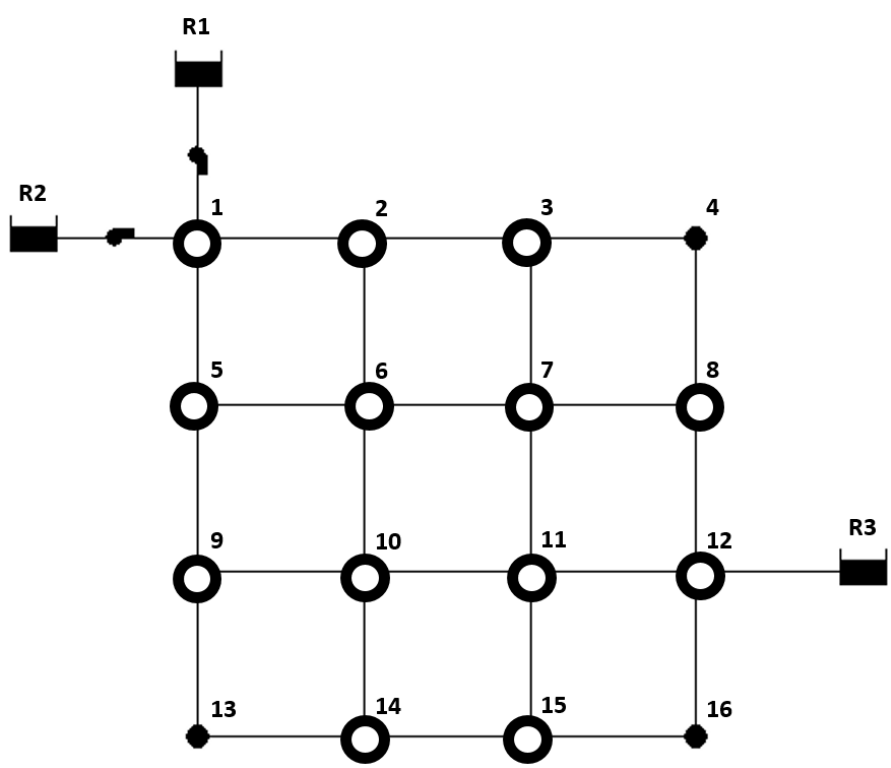

Figure 2. Illustrative example network graph

© ASCE

Downloaded from ascelibrary.org by Technion Israel Institute Of Technology on 02/22/25. Copyright ASCE. For personal use only; all rights reserved.

Table 1. Illustrative example node data

Node-ID	Base Demand (GPM)	Min Co-Limit	Max Co-Limit
1	0	0	0
2	10	40	70
3	5	40	70
4	10	40	70
5	50	20	50
6	0	0	0
7	0	0	0
8	10	20	50
9	30	30	60
10	0	0	0
11	0	0	0
12	0	0	0
13	40	30	60
14	80	30	60
15	60	20	50
16	60	40	70

Abbreviations: Co-Limit- Concentration limit, GPM- Gallons per minute

Initial concentrations at the sources before treatment $\mathrm{IRC} = (100,200,150)$. Treatment costs for each source $\mathrm{co} = (5000, 200,10000)$.

Surrogate model:

A unique surrogate equation is developed for each 10 demand outlet concentrations. $a_j^T CR + CR^T E_j s$ surrogate model form has been selected based on the model accuracy. Here, a_j is a vector and E_j is a matrix corresponding to node j. These equations are developed for a particular flow direction in the WDS. The procedure to obtain the surrogate model is explained as a flowchart in Fig (3).

The surrogate model's accuracy depends on the flow directions and the how far is the node from source the maximum RMSE obtained is 2.876, and minimum R^2 = 0.989 for all the four cases studied.

RESULTS

Four different flow directions are studied as different scenarios. For each scenario five different uncertainty sets for the mixing parameter “s”.

$$s \in [1,1], s \in [0.5,0.5], s \in [0.4,0.6], s \in [0.2,0.8], s \in [0,1]\}.$$

© ASCE

Downloaded from ascelibrary.org by Technion Israel Institute Of Technology on 02/22/25. Copyright ASCE. For personal use only; all rights reserved.

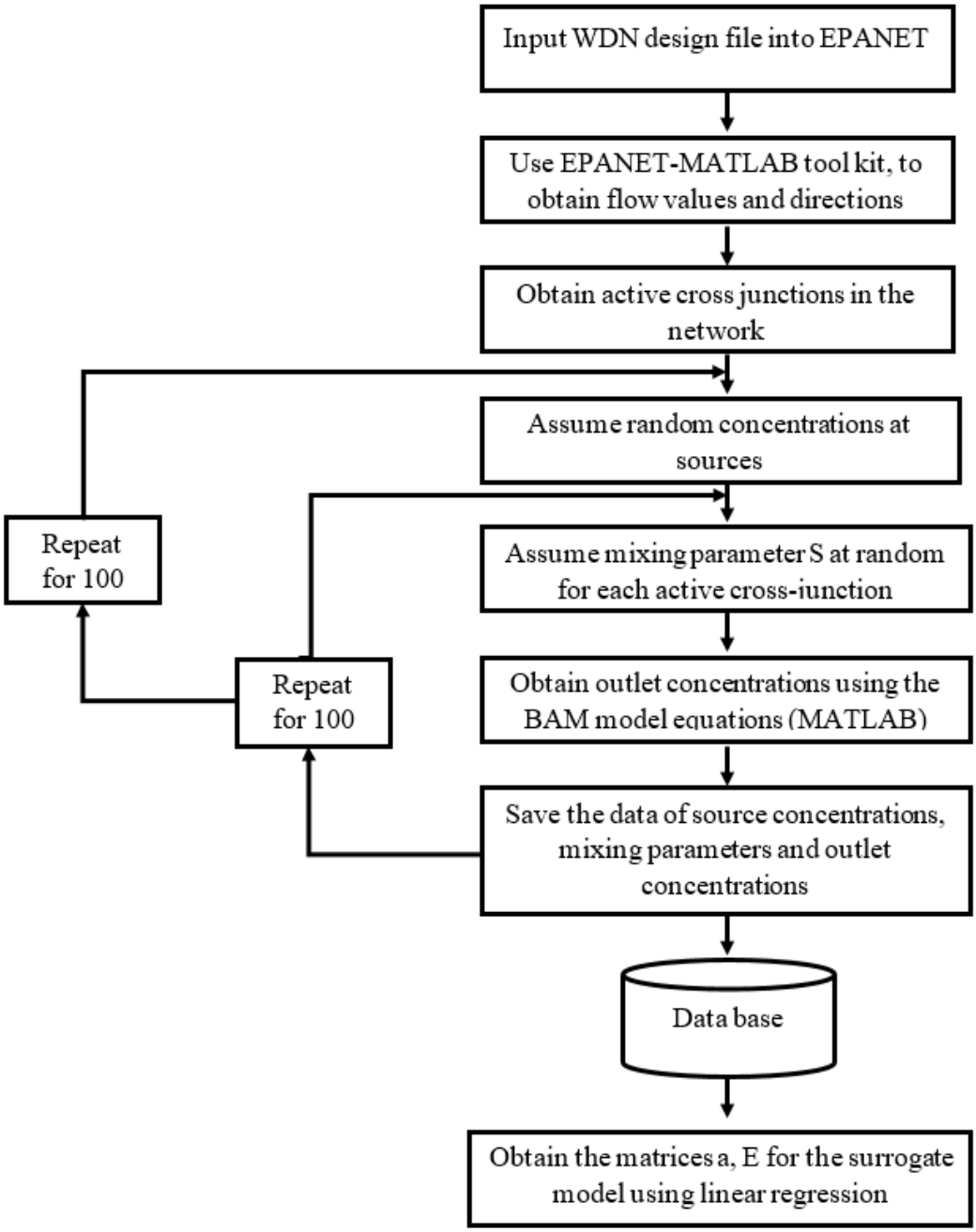

Figure 3. Flow chat showing the procedure for generating surrogate model

For each optimal treatment levels obtained, infeasibility percentage is estimated through Monte Carlo simulations by randomly varying the mixing parameter s between [0,1] and checking the concentration limits thought BAM model equations. The percentage of cases where the end constraints are violating is reported as infeasibility percentages. The obtained infeasibility percentages and the related treatment costs are reported in the graphs Fig (4). From the results we can infer that the level of mixing as well as the location of non-uniform mixing cross junctions effect the treatment cost required for satisfying the water quality constraints. The flow directions also play a crucial role in the treatment level required at sources.

© ASCE

Downloaded from ascelibrary.org by Technion Israel Institute Of Technology on 02/22/25. Copyright ASCE. For personal use only; all rights reserved.

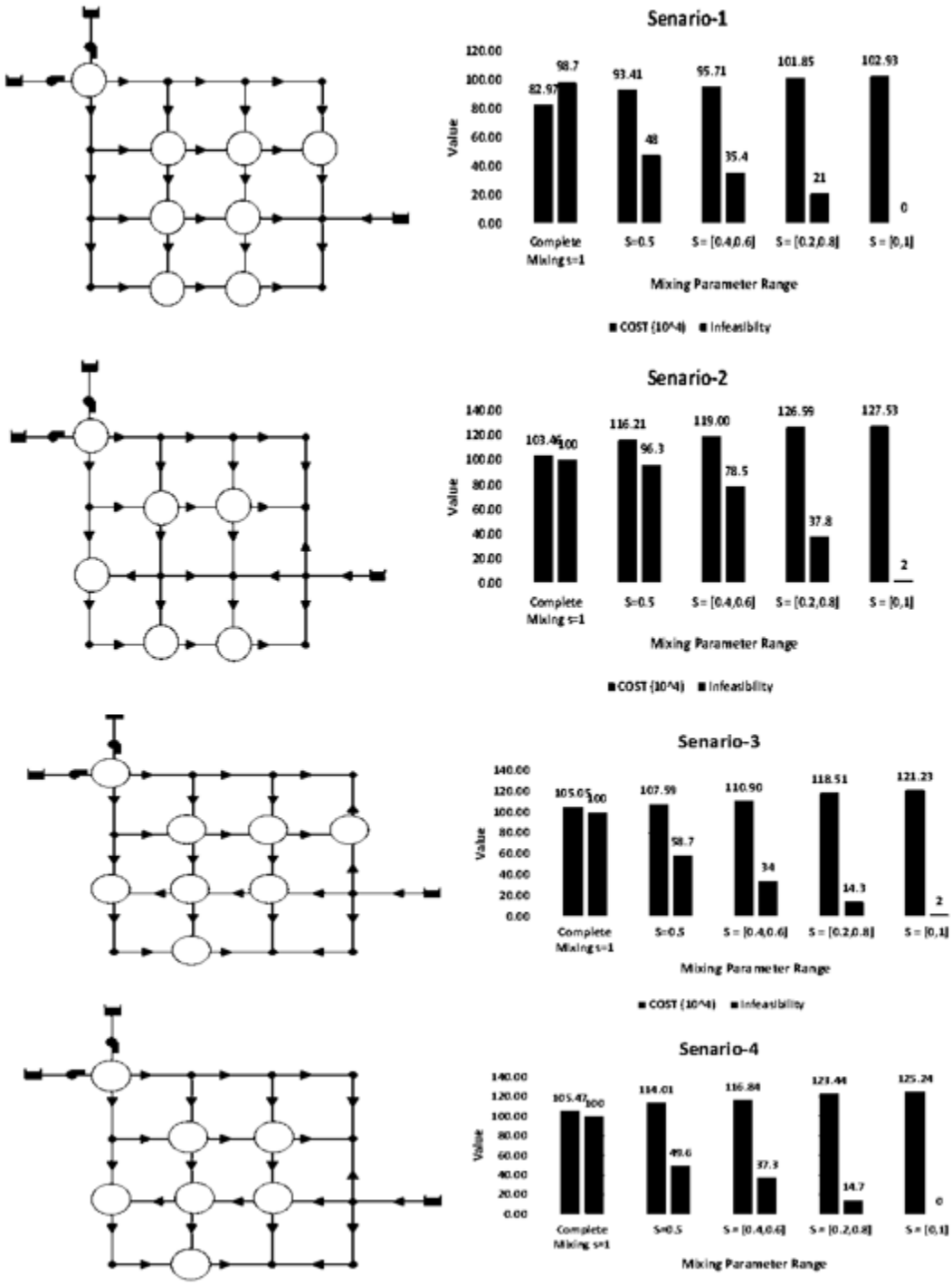

Figure 4. Robust optimization result for different scenarios

CONCLUSIONS

Treatment plant optimization problem is devised to understand the effect of uncertainty in non-uniform mixing. The level of mixing doesn't follow any probability distribution, handling this requires a non-probabilistic approach like robust optimization which is explored in this

© ASCE

Downloaded from ascelibrary.org by Technion Israel Institute Of Technology on 02/22/25. Copyright ASCE. For personal use only; all rights reserved.

study. The complete methodology is explained for a simple 4x4 grid network with three sources. With varying flow patterns, the locations of non-uniform mixing junctions have changed effecting the robust treatment costs for different uncertainty sets. A new set of surrogate models is required for change in the flow directions. This approach seems promising to be extended to large real-life networks. Many assumptions are made in this study, like steady-state conditions, non-reactive contaminants and even the treatment cost problem is with hypothetical unitless quantities. The emphasis of this paper is to introduce a new approach that might be a step towards solving a real-life problem with uncertainty in mixing at junctions.

ACKNOWLEDGEMENT

This research was supported by a grant from the United States–Israel Bi-national Science Foundation (BSF).

REFERENCES

Babayan, A., Kapelan, Z., Savic, D., and Walters, G. (2005). "Least-cost design of water distribution networks under demand uncertainty." *Journal of Water Resources Planning and Management, American Society of Civil Engineers*, 131(5), 375–382.

Babayan, A. V., Savic, D. A., Walters, G. A., and Kapelan, Z. S. (2007). "Robust Least-Cost Design of Water Distribution Networks Using Redundancy and Integration-Based Methodologies." *Journal of Water Resources Planning and Management*, 133(1), 67–77.

Chung, G., Lansey, K., and Bayraksan, G. (2009). "Reliable water supply system design under uncertainty." *Environmental Modelling and Software*, Elsevier Ltd, 24(4), 449–462.

Fowler, A. G., and Jones, P. (1991). "Simulation of water quality in water distribution systems." *Proc. Water Quality Modeling in Distribution Systems*, AwwaRF/EPA, Cincinnati, Ohio, United States, 4-5.

Ho, C. K., and Khalsa, S. S. (2008). "EPANET-BAM: water quality modeling with incomplete mixing in pipe junctions." *Water Distribution Systems Analysis 2008*, 1–11.

Ho, C. K., Orear, L., Jr., Wright, J. L., and McKenna, S. A. (2008). "Contaminant mixing at pipe joints: Comparison between laboratory flow experiments and computational fluid dynamics models." *Water Distribution Systems Analysis Symposium 2006*, 1–18.

Housh, M., Ostfeld, A., and Shamir, U. (2011). "Optimal multiyear management of a water supply system under uncertainty: Robust counterpart approach." *Water Resources Research*, 47(10), 1–15.

Kang, D. S., Pasha, M. F. K., and Lansey, K. (2009). "Approximate methods for uncertainty analysis of water distribution systems." *Urban Water Journal*, 6(3), 233–249.

Kapelan, Z., Babayan, A. V., Savic, D. A., Walters, G. A., and Khu, S. T. (2004). "Two new approaches for the stochastic least cost design of water distribution systems." *Water Science and Technology: Water Supply*, 4(5–6), 355–363.

Kapelan, Z. S., Savic, D. A., and Walters, G. A. (2005). "Multiobjective design of water distribution systems under uncertainty." *Water Resources Research*, 41(11), 1–15.

Lansey, K. E., Duan, N., Mays, L. W., and Tung, Y. (1989). "Water Distribution System Design Under Uncertainties." *Journal of Water Resources Planning and Management*, 115(5), 630–645.

© ASCE

Osvaldo, O., Calvo, M., Quintiliani, C., Alfonso, L., Di Cristo, C., Leopardi, A., Solomatine, D., De, G., and Di Cristo, C. (2019). "Robust optimization of valve management to improve water quality in WDNs under demand uncertainty Robust optimization of valve management to improve water quality in WDNs under." *Urban Water Journal*, Taylor & Francis, 15(10), 943–952.

Paez, N., Saldarriaga, J., and Bohorquez, J. (2017). "Water Quality Modeling Considering Incomplete Mixing in Extended Periods." *Procedia Engineering*, The Author(s), 186(571), 54–60.

Pasha, M. F. K., and Lansey, K. (2005). "Analysis of uncertainty on water distribution hydraulics and water quality." *World Water Congress 2005: Impacts of Global Climate Change - Proceedings of the 2005 World Water and Environmental Resources Congress*, 10.

Pasha, M. F. K., and Lansey, K. (2010). "Effect of parameter uncertainty on water quality predictions in distribution systems-case study." *Journal of Hydroinformatics*, 12(1), 1–21.

Perelman, L., Housh, M., and Ostfeld, A. (2013a). "Least-cost design of water distribution systems under demand uncertainty: The robust counterpart approach." *Journal of Hydroinformatics*, 15(3), 737–750.

Perelman, L., Housh, M., and Ostfeld, A. (2013b). "Robust optimization for water distribution systems least cost design." *Water Resources Research*, 49(10), 6795–6809.

Romero-Gomez, P., Choi, C. Y., Lansey, K. E., Preis, A., and Ostfeld, A. (2008). "Sensor network design with improved water quality models at cross junctions." *Proc., Water Distribution Systems Analysis 2008*, American Society of Civil Engineers, 1-9.

Romero-Gomez, P., Lansey, K. E., and Choi, C. Y. (2011). "Impact of an incomplete solute mixing model on sensor network design." *Journal of Hydroinformatics*, 13(4), 642-651.

Song, I., Romero-Gomez, P., and Choi, C. Y. (2009). "Experimental Verification of Incomplete Solute Mixing in a Pressurized Pipe Network with Multiple Cross Junctions." *Journal of Hydraulic Engineering*, 135(11), 1005–1011.

Tolson, B. A., Maier, H. R., Simpson, A. R., and Lence, B. J. (2004). "Genetic Algorithms for Reliability-Based Optimization of Water Distribution Systems." *Journal of Water Resources Planning and Management*, 130(1), 63–72.

Downloaded from ascelibrary.org by Technion Israel Institute Of Technology on 02/22/25. Copyright ASCE. For personal use only; all rights reserved.

© ASCE